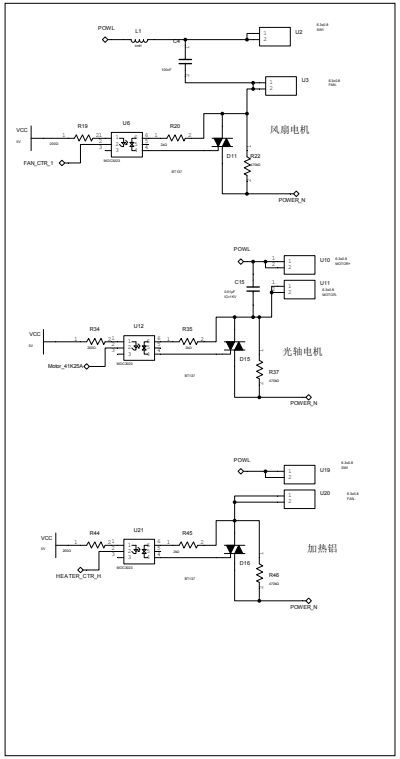

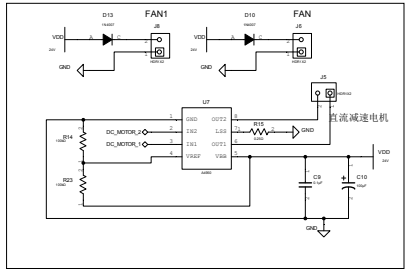

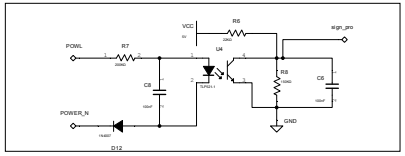

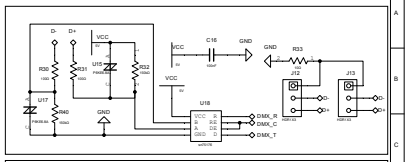

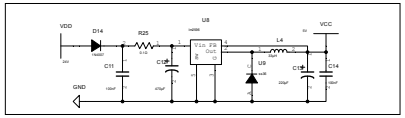

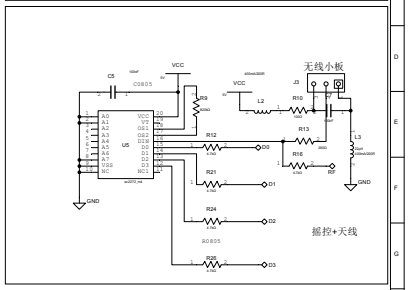

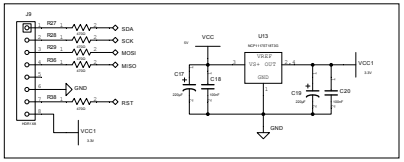

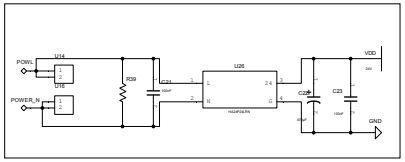

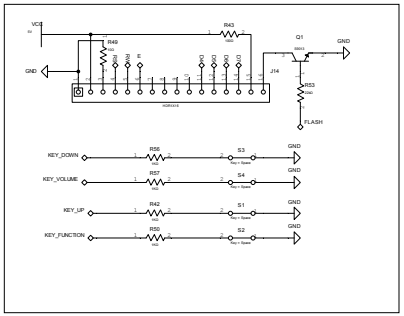

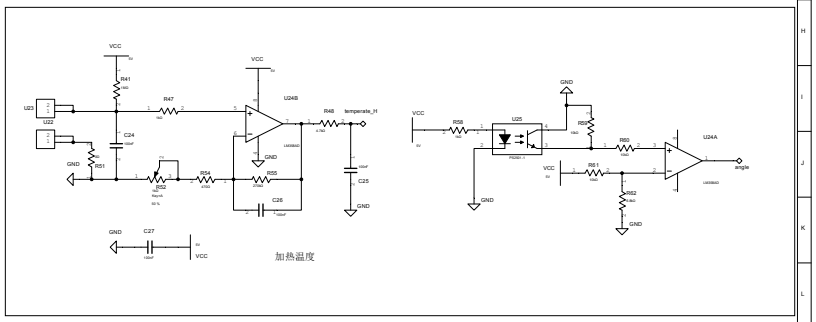

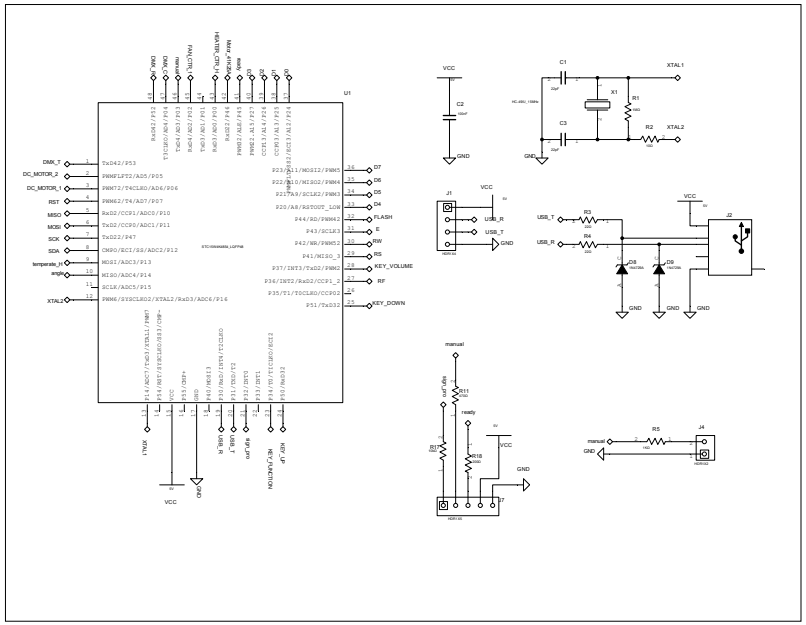

REV: 2.0	DATE: 2018-10-12	ENG: EWAY
PROJECT: MR-K-LCD		
COMPANY: ADDRESS: CITY: COUNTRY:		
INITIAL:	PAGE: 2	OF: 2